International Journal of Heat and Mass Transfer 128 (2019) 980–990

Contents lists available at ScienceDirect

International Journal of Heat and Mass Transfer

journal homepage: www.elsevier.com/locate/ijhmt

Optimized inlet geometry of a laidback fan-shaped film cooling hole – Experimental study of film cooling performance

Marc Fraas *, Tobias Glasenapp, Achmed Schulz, Hans-Jörg Bauer

Karlsruhe Institute of Technology, Institute of Thermal Turbomachinery, Kaiserstr. 12, 76131 Karlsruhe, Germany

ARTICLE INFO

Article history:
Received 13 April 2018
Received in revised form 28 July 2018
Accepted 8 September 2018
Available online 21 September 2018

Keywords:
Film cooling
Cooling hole geometry
Superposition approach
Internal coolant flow
Heat transfer measurements
Hole inlet optimization

ABSTRACT

The orientation of an internal coolant channel with respect to the external hot gas flow has a major impact on film cooling performance. Previous studies reported a considerable decrease of cooling performance with perpendicular coolant crossflow for a state-of-the-art laidback fan-shaped film cooling hole. The objective of this experimental study is to investigate the extent to which cooling performance in such a setup can be improved by using an optimized cooling hole inlet geometry. For this purpose, three geometries with different cooling hole inlets are investigated. Results are compared to a baseline geometry with a sharp-edged cylindrical inlet. A test rig is used which enables compliance with all relevant non-dimensional parameters. High-resolution infrared measurements are conducted and heat transfer as well as cooling effectiveness are evaluated for up to 50 cooling hole diameters downstream of the cooling hole exit.

Results show that the cooling hole inlet geometry tremendously affects cooling performance. Diffuser aerodynamics are altered for all investigated geometries with a modified inlet. This leads to a more symmetrical pattern of the film cooling jet for two of the investigated geometries. As a consequence, film cooling effectiveness is increased compared to the baseline case. The disadvantages of a perpendicular coolant flow in terms of effectiveness are entirely eliminated. Additionally, heat transfer coefficients are lowered. An overall evaluation reveals that the heat flux into the wall is significantly reduced for the proposed optimized cooling hole geometries.

© 2018 Elsevier Ltd. All rights reserved.

1. Introduction

Thermal efficiency of gas turbines depends on the pressure ratio and the turbine inlet temperature. As a consequence, temperatures in the first turbine stages of modern gas turbines are higher than the melting temperatures of the applied materials. Vanes and blades of the first turbine stages are therefore cooled intensively by internal cooling and film cooling.

For film cooling, coolant is blown onto the surface of the turbine blades through small holes and forms an insulating coolant film. Since the coolant mixes with the hot gas, the cooling performance decreases steadily downstream of a film cooling hole.

In general, the use of coolant is associated with losses. Cooling air does not take part in the entire thermodynamic cycle, since it bypasses the combustion chamber. Moreover, mixing and discharge losses arise with film cooling. Hence, reduction of the coolant mass flow is of interest.

Film cooling affects both adiabatic wall temperature and heat transfer. It is influenced by a variety of different parameters, such as blowing and density ratio [1], hot gas Reynolds number [2], displacement thickness [2], and turbulence intensity [3]. Bogard and Thole [4] give a comprehensive overview.

The geometric shape of a film cooling hole has a major impact on film cooling performance. The simplest hole shape is a cylindrical one. Goldstein et al. [5] suggested to use holes with a cylindrical inlet and a diffuser-shaped outlet of the film cooling hole instead. Their results show that the jet momentum at the cooling hole exit and, hence, jet penetration into the hot gas is reduced for diffuser-shaped holes. The jet remains attached to the surface even for high blowing ratios. In addition, the lateral expansion of the jet is increased, which is also desirable. Diffuser-shaped holes are typically divided into three types: Laidback holes, fan-shaped holes, and laidback fan-shaped holes. Whereas laidback holes improve the centerline effectiveness only [6], fan-shaped and laidback fan-shaped holes significantly improve lateral jet expansion and film cooling effectiveness. This is especially the case for higher blowing ratios, see Gritsch et al. [7]. However, this only holds true if there is a significant diffusion of the coolant due to the film

* Corresponding author.
E-mail address: marc.fraas@kit.edu (M. Fraas).

https://doi.org/10.1016/j.ijheatmasstransfer.2018.09.035
0017-9310/© 2018 Elsevier Ltd. All rights reserved.

Nomenclature

A	area
D	cooling hole diameter
DR	density ratio ($= \rho_c/\rho_h$)
H	height
L	cooling hole length
M	blowing ratio ($= (\rho_c u_c)/(\rho_h u_h)$)
$NHFR$	net heat flux reduction
P	cooling hole pitch
Re	Reynolds number
T	temperature
Tu	turbulence intensity
h	heat transfer coefficient
l_ϵ	turbulent length scale
p	pressure
$\dot{q}$	convective heat flux density
r	radius
u	free stream velocity
x	streamwise coordinate
y	lateral coordinate
z	wall-normal coordinate

Greek

α	ejection angle
δ_1	displacement thickness
η	film cooling effectiveness
Θ	non-dimensional temperature
λ	thermal conductivity
ρ	density

Subscripts/Superscripts

aw	adiabatic wall
c	coolant
cc	cooling channel
cyl	cylindrical
f	film cooling
h	hot gas
lat	laterally averaged
max	maximum value
rec	recovery
t	total
w	wall
0	without film cooling
$\bar{}$	spatially averaged

Abbreviations

BL	baseline
CFD	computational fluid dynamics
ITS	Institute of Thermal Turbomachinery
PEEK	polyether ether ketone
TiAl	titanium aluminide (TiAl6V4)

cooling hole shape. If this is not the case, performance of shaped and cylindrical holes are comparable, see Bell et al. [8]. Highest film cooling effectiveness can be achieved by the use of shaped holes with a compound angle, as shown by Bell et al. [8] and Furukawa and Ligrani [9]. A more detailed overview of shaped holes is given by Bunker [10]. Diffuser-shaped holes are state of the art and widely used in modern gas turbines.

In many studies, film cooling holes are fed by a plenum. However, in real-engine applications this is often not the case, since an internal flow is present to increase internal heat transfer. The orientation of such a flow varies. Whereas a parallel orientation of the coolant channel to the hot gas flow has only minor effects on the cooling performance [7], a perpendicular orientation has a significant impact. Such flows are present in many applications. Due to the strong deflection, the flow separates at the inlet and a helical motion is established, as shown by Kohli and Thole [11]. The strong deflection leads to high pressure losses for cylindrical as well as diffuser-shaped holes [12]. The effect of perpendicular coolant flow is different for cylindrical and diffuser-shaped holes: As a result of the helical motion, the film cooling footprint on the surface is asymmetric for cylindrical holes [13]. Results by Gritsch et al. [14] show that the helical motion of the coolant leads to a wider lateral extension and stabilizes the jet. Consequently, the coolant jet does not separate from the surface even at high blowing ratios. Compared to a case with plenum inflow, film cooling effectiveness is increased for high blowing ratios and slightly reduced for low blowing ratios. Heat transfer coefficients, on the other hand, are increased due to the intensified contact between coolant and surface [15]. For diffuser-shaped holes with perpendicular coolant flow orientation, the changed flow patterns inside the cylindrical inlet part of the cooling hole lead to an asymmetric flow separation in the diffuser part. Therefore, film cooling effectiveness is reduced in most cases, as shown by Gritsch et al. [14]. Results by McClintic et al. [16] reveal that the pattern of the asymmetric flow separation is strongly influenced by the velocity ratio between coolant flow in the internal cooling channel and inside the cooling hole, u_{cc}/u_h. In the near-hole region, heat transfer coefficients are reduced for high velocity ratios u_{cc}/u_h compared to a plenum inflow case, as is shown by results of Saumweber and Schulz [15]. This is explained by the reduced contact between coolant and hot gas. For lower velocity ratios, however, heat transfer coefficients are increased in the near-hole region, as shown by Fraas et al. [17]. In this case, the contact between coolant and surface is not reduced significantly. Flow separation at the cooling hole inlet is assumed to cause high turbulence intensities inside the coolant jet. Thus, heat transfer coefficients on the surface are increased. Farther downstream, heat transfer coefficients are increased for perpendicular coolant flow and all velocity ratios u_{cc}/u_h compared to a parallel coolant flow [17].

For perpendicular coolant flow orientation, turbulence promoters, such as ribs inside the coolant channel, can have a major impact on the coolant jet: Compared to a case with perpendicular coolant flow and a smooth channel, orthogonal ribs do not further increase the already high inflow pressure losses of cylindrical holes significantly [18]. However, the inflow pressure losses can be reduced by inclined ribs, as shown by Heneka et al. [19]. This is attributed to vortices forming at inclined ribs. Depending on the orientation, inclined ribs can lead to a reduced helical motion of the coolant inside the cylindrical film cooling hole [20], resulting in an almost symmetric footprint on the surface comparable to a plenum inflow [21,22]. For diffuser-shaped holes and low blowing ratios, a rib orientation which reduces helical motion of the coolant inside the cooling hole suppresses the asymmetric flow separation inside the diffuser, leading to a symmetric footprint on the surface. Film cooling effectiveness is increased in such cases. For diffuser-shaped holes and higher blowing ratios, however, a rib orientation which intensifies the helical motion leads to higher film cooling effectiveness. This is shown by Sakai et al. [23]. These results show that the phenomena leading to an asymmetric flow separation inside the diffuser are not yet fully understood. More studies are required.

Most studies on the cooling hole shape focus on the outlet of the cooling hole. To the knowledge of the authors, only one study by

Wilfert and Wolff [24] focused on shaping the cooling hole inlet geometry. They used a vortex generator to establish a counter-rotating vortex inside the hole and improve film cooling effectiveness for parallel coolant flow orientation. The reasons for the focus on the cooling hole outlet shape are the existing manufacturing limitations, since film cooling holes are most commonly manufactured by laser drilling. New options result from novel manufacturing techniques, such as additive manufacturing. A study by Basak et al. [25] shows that it is possible to manufacture single-crystal components using additive manufacturing. There are still geometric deviations between film cooling holes manufactured by common techniques and by additive manufacturing. These deviations also affects the cooling performance, see Stimpson et al. [26]. However, assuming the technology will further improve, gas turbine blades and vanes can be manufactured additively in the future. This will allow to shape the cooling hole inlet.

The above-mentioned studies with ribs and perpendicular coolant flow indicate that the flow at the cooling hole inlet does have a major impact on the cooling performance. In case of a perpendicular coolant flow, the performance of diffuser-shaped holes decreases rapidly. It has not yet been investigated whether shaping of the cooling hole inlet can increase the performance of diffuser-shaped holes with perpendicular coolant flow.

To investigate new cooling hole shapes, a novel test rig built at the Institute of Thermal Turbomachinery (ITS) is used for this study. This test rig is discussed in detail by Fraas et al. [27]. All important non-dimensional parameters, such as density ratio, blowing ratio, and Reynolds numbers, are met to ensure transferability of the results to engine conditions. The test rig enables the investigation of parallel as well as perpendicular coolant channel orientations with varying coolant channel Reynolds numbers. In a previous study by Fraas et al. [17], the results of a state-of-the-art 10-10-10 laidback fan-shaped hole were published, showing decreased film cooling performance for a perpendicular coolant flow. These results are used as a baseline case for the present study.

The objective of this study is to investigate the extent to which cooling performance can be increased by an optimized inlet geometry for a diffuser-shaped hole with a perpendicular coolant flow. Three new geometries are investigated at different blowing ratios and constant coolant channel Reynolds number. Results for adiabatic film cooling effectiveness as well as heat transfer variation due to film cooling are presented and discussed to provide a comprehensive insight into film cooling performance of the new cooling hole shapes.

2. Experimental setup and data processing

In this section, the test rig and the cooling hole shapes investigated are introduced, followed by a description of the measurement setup and data processing methods. A more detailed presentation of the test rig, the measurement technique, and the measurement uncertainties is given by Fraas et al. [27].

2.1. Experimental setup

A schematic of the test rig used for the current study is shown in Fig. 1. It consists of a hot gas and a coolant channel. The uniformity of the inlet hot gas flow conditions was validated by Fraas et al. [27]. It is important to achieve well-defined and realistic flow conditions at the position of the cooling hole outlet. Therefore, turbulence grid ① and boundary layer bleed ② are installed in the inflow section of the test rig. The coolant channel is oriented perpendicular to the hot gas flow direction. Both channels are connected via five film cooling holes aligned in a row in the ejection module ③. By using five holes, interactions between the coolant jets are considered and periodic conditions for the central hole are assured. No compound angle is used. Holes are scaled up to a diameter of $D = 10$ mm to enable high-resolution measurements. In order to prevent interaction between coolant jet and channel sidewalls, the hot gas channel width is set to $50D$. The material of the ejection module is PEEK, a high-temperature-resistant plastic with a low thermal conductivity ($\lambda = 0.27$ W/m/K)). Thus, heat pick-up by the coolant inside the cooling holes is minimized. The ejection module is interchangeable for the investigation of different cooling hole shapes. The coordinate system is a right-handed trihedron and its origin is placed at the intersection of central cooling hole axis and surface. Consequently, coolant channel flow is in negative y-direction. Coolant enters the hot gas channel through the film cooling holes. Hot gas and coolant mix and the resulting temperature distribution on the test plate ⑤ is determined using an infrared camera. To gain optical access, infrared-transmissive sapphire windows ④ are placed in the top wall of the channel. The measurement area extends up to $50D$ downstream of the cooling hole outlet.

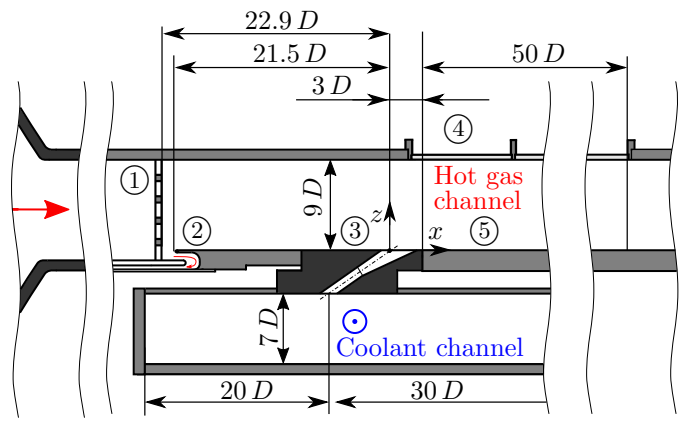

Fig. 1. Schematic of the test rig, adapted from Fraas et al. [27] ① Turbulence grid ② Boundary layer bleed ③ Ejection module ④ Sapphire windows ⑤ Test plate.

Test conditions are given in Table 1. As outlined by Fraas et al. [27], the chosen test conditions match engine conditions. Thus, transferability of the results is ensured. For the current study, the Reynolds number is kept constant in the coolant channel. Consequently, the stated values for the velocity ratio between coolant channel and hot gas u_{cc}/u_h vary slightly during the experiments.

The aim of this study is to optimize cooling hole inlet geometry in order to improve film cooling performance for perpendicular coolant flow. For this, three new hole inlet geometries are investigated and compared to a baseline case with a sharp-edged cooling

Table 1
Experimental parameters and test conditions.

Parameter	Variable	Value
Cooling hole diameter	D	10 mm
Cooling hole pitch	P	$8D$
Total hot gas temperature	$T_{t,h}$	510 K
Hot gas Reynolds number	$Re_{D,h}$	13×10^3
Hot gas turbulence intensity	Tu_h	8.2%
Hot gas turbulent length scale	l_ϵ	0.73 D
Hot gas displacement thickness	δ_1	$0.05D$
Total coolant temperature	$T_{t,c}$	300 K
Coolant channel Reynolds number	$Re_{D,cc}$	5×10^3
Coolant channel to hot gas velocity ratio	u_{cc}/u_h	≈0.15
Density ratio	DR	1.7
Blowing ratio	M	0.5...3.0

hole inlet. All geometries have a cylindrical segment, followed by the same laidback fan-shaped outlet geometry. The baseline geometry is given in Fig. 2. It is a 10-10-10 laidback fan-shaped hole with an inclination angle of 35°, a length-to-diameter ratio of 7.5, an area ratio of 3.71, and a coverage ratio (hole breakout width based on the pitch) of 0.35. The inlet and breakout edges of the diffuser are sharp-edged and the corners are rounded with 0.5 D.

In order to optimize the hole aerodynamics and, consequently, film cooling jet distribution, a NACA intake duct is used in a first approach. The geometry is shown in Fig. 3. The NACA intake is designed according to Frick et al. [28]. The corners at the intersection between NACA intake and cooling hole are rounded to minimize flow separation at this position. A preliminary CFD study indicated that such a hole inlet reduces helical motion inside the cylindrical part of the cooling hole.

For the second geometry shown in Fig. 4, the inlet of the cooling hole is rounded with a radius of 0.5 D. The purpose of this approach is to minimize flow separation at the inlet. It is assumed that the wake of this flow separation plays a major role inducing the one-sided flow separation inside the diffuser. Consequently, a minimization of the flow separation is believed to improve diffuser aerodynamics and, hence, the cooling performance.

Finally, a combination of the above-mentioned geometries is investigated. The rounded NACA inlet geometry is shown in Fig. 5. Dimensions do not differ from the geometries discussed above and, hence, are not shown. In the lower right hand-corner, a three-dimensional view of the inlet geometry is shown to give a better understanding. Purpose of this geometry is to combine the effects of a minimized flow separation and a minimized helical motion inside the cooling hole.

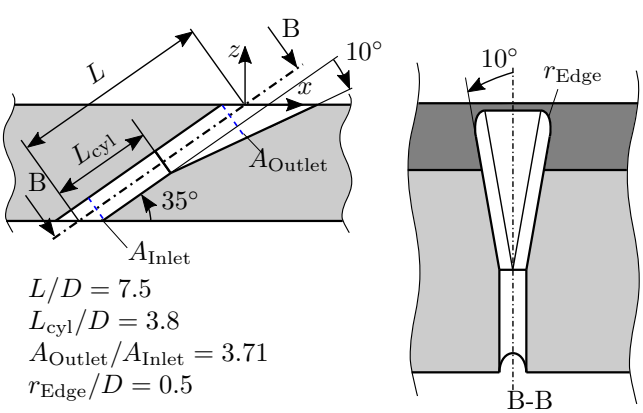

Fig. 2. Geometry of the baseline laidback fan-shaped hole (adapted from Fraas et al. [17]).

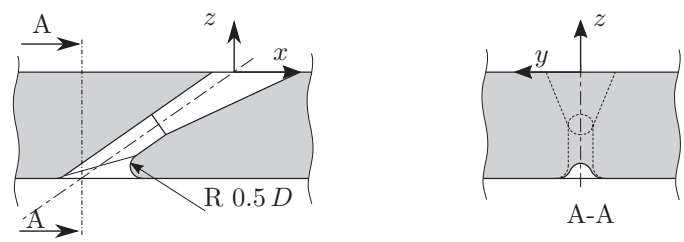

Fig. 4. Geometry of the rounded inlet.

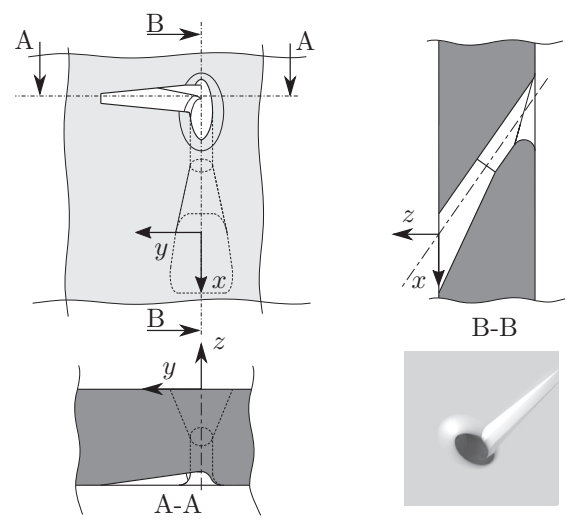

Fig. 5. Geometry of the rounded NACA inlet.

2.2. Measurement setup and data processing

The purpose of film cooling is to reduce the wall-normal heat flux at a specific local wall temperature T_w. The wall-normal heat flux is calculated as

$$\dot{q}_z(x,y) = h_f \cdot [T_{aw}(x,y) - T_w(x,y)] \tag{1}$$

with the heat transfer coefficient with film cooling h_f and the adiabatic wall temperature $T_{aw}(x,y)$ [29]. Film cooling affects both heat transfer coefficient and adiabatic wall temperature. Consequently, both parameters have to be determined in an experiment. The superposition approach is one option to obtain them experimentally. It was first introduced by Eckert in a discussion on results presented by Metzger et al. [30] and subsequently employed by Choe et al. [29]. It describes the linear relation between wall temperature

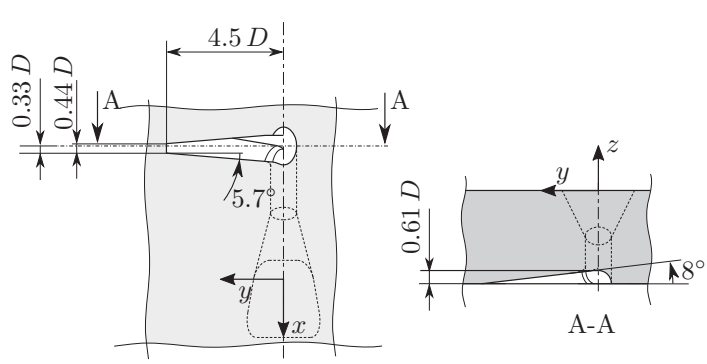

Fig. 3. Geometry of the NACA inlet.

$T_w(x,y)$ and wall-normal heat flux $\dot{q}_z(x,y)$. Two experiments with identical hot gas and coolant flow conditions, but different thermal boundary conditions for the wall need to be carried out in order to calculate the values of interest. The superposition approach has been validated successfully at the ITS [31].

For this study, two test plates are used to introduce the different thermal boundary conditions. One test plate is made of titanium aluminide (TiAl6V4, H = 14 mm, $\lambda = 6.5$–9.1 W/m/K in the temperature range of interest) and is cooled on the backside with water at about ambient temperature to establish a high wall-normal heat flux. The other test plate consists of PEEK (H = 15 mm) and is nearly adiabatic. A schematic of both test plates is shown in Fig. 6. Details are given by Fraas et al. [27]. To calculate the wall-normal heat flux, the temperature distribution on the surface and on the backside of the test plate is required. Temperature distribution on the surface is determined using in-situ calibrated thermography. Processing of the camera raw data and in-situ calibration is performed according to a procedure introduced by Ochs et al. [32,33]. Each image consists of 8 frames that are averaged to reduce noise. To ensure a high spatial resolution, five infrared images are taken downstream of the central cooling hole and merged subsequently. A weighting algorithm is used in the areas where the images overlap. The resulting resolution is 0.32 mm per Pixel. For in-situ calibration, 0.25 mm type K thermocouples are placed into small notches beneath the surface. The test plate is then coated with *NEXTEL velvet coating* to ensure a homogeneous and highly emissive surface, see Fig. 6. At the backside of the test plates, discrete thermocouple readings are interpolated to determine the temperature distribution. Subsequently, the wall-normal heat flux is calculated by means of a 3-D finite element analysis with a grid resolution on the surface of 1 mm × 1 mm. The resulting conductive heat flux is corrected by the radiative heat flux from the hot channel walls. Since water cooling cannot be applied from the beginning of the test plate, but farther downstream, data are subsequently evaluated for $x/D \geqslant 5$ only.

Then, local adiabatic wall temperature, adiabatic film cooling effectiveness η_{aw}, and heat transfer coefficients with film cooling h_f are calculated. Adiabatic film cooling effectiveness is defined as

$$\eta_{aw} = \frac{T_{rec,h} - T_{aw}}{T_{rec,h} - T_{t,c}} \tag{2}$$

with the total coolant temperature $T_{t,c}$ and the hot gas recovery temperature $T_{rec,h}$. In order to calculate the local heat transfer variation h_f/h_0, heat transfer coefficients without film cooling were measured beforehand (see Fraas et al. [27]).

To examine the combined effect of reduced adiabatic wall temperature and heat transfer variation, the heat flux reduction due to film cooling needs to be calculated. Luckey et al. [34] introduced the net heat flux reduction *NHFR*. It is defined as

$$NHFR = 1 - \frac{\dot{q}_z}{\dot{q}_{z,0}} = 1 - \frac{h_f}{h_0}(1 - \eta_{aw}\Theta) \tag{3}$$

and relates the resulting heat fluxes with and without film cooling. The non-dimensional temperature

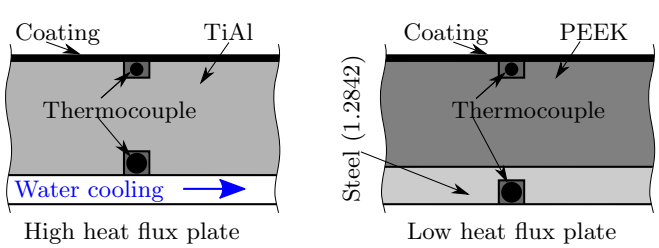

Fig. 6. Schematic of both test plates (from Fraas et al. [27]).

$$\Theta = \frac{T_{rec,h} - T_{t,c}}{T_{rec,h} - T_w} \tag{4}$$

is required for its calculation. Consequently, it depends on the wall temperature T_w and, thus, varies for different applications.

Measurement uncertainties for the film cooling quantities in this study are calculated according to Kline and McClintock [35]. It is assumed, that the deviation between thermocouple data and in-situ calibrated infrared data is below 1 K and the maximum uncertainties for the thermocouple measurements are 1.5 K. The calculation of the uncertainties for the used test rig is discussed in detail by Fraas et al. [27]. Adiabatic film cooling effectiveness is determined with an uncertainty of $\leqslant 0.012$. The uncertainty of the heat transfer coefficient is $\leqslant 12\%$ in all areas, where the adiabatic film cooling effectiveness is below 0.7. This holds true for all points of the measurement area.

3. Results and discussion

In the following section, the impact of different cooling hole inlet shapes on film cooling effectiveness and heat transfer variation is discussed. All geometries with modified cooling hole inlet geometry are tested with perpendicular coolant flow only. They are compared to the baseline geometry with a sharp-edged cylindrical inlet and perpendicular coolant flow. The Reynolds number in the coolant channel is kept constant at $Re_{D,cc} = 5000$ in all experiments. Coolant flows in negative y-direction.

The distributions of adiabatic film cooling effectiveness on the surface for the geometries investigated are shown in Fig. 7. For all cases, effectiveness decreases downstream of the film cooling hole due to mixing of coolant and hot gas. Results prove that a changed hole inlet geometry has a severe impact on the flow separation in the diffuser and, thus, on the film cooling effectiveness distribution on the surface. In case of the baseline geometry, an asymmetric jet distribution is observed, see Fig. 7a. The maximum of effectiveness is shifted into positive y-direction. The reason is an asymmetric flow separation inside of the diffuser due to the perpendicular coolant flow. Flow separates in the area $y/D < 0$ of the diffuser. With increasing blowing ratio, the asymmetry decreases. This is due to a change in velocity ratio u_{cc}/u_c from 0.26 at $M = 1.0$ to 0.09 at $M = 3.0$. The lower the velocity ratio u_{cc}/u_c is, the lower are the perpendicular coolant flow effects.

Results for the geometry with a NACA inlet are shown in Fig. 7b. For this geometry, a preliminary CFD study indicated a reduced helical motion inside the cooling hole. Similar to the baseline case, an asymmetric flow separation occurs in the diffuser and the jet is shifted. With increasing blowing ratio, asymmetry increases and the jet constricts. Consequently, film cooling effectiveness is reduced significantly at higher blowing ratios compared to the baseline case. The shift in effectiveness is towards the negative y-direction contrary to the baseline case. The reason for the changed position of flow separation in the diffuser is believed to be the reduced helical motion: At the cooling hole inlet, coolant flow separates at the crossover between NACA intake and cylindrical cooling hole. Since helical motion is reduced, the resulting wake does not rotate inside the cooling hole and is still positioned in the area $y/D > 0$ when the flow enters the diffuser. Energy is reduced in the wake area. Thus, flow separates at the diffuser entrance in the area $y/D > 0$. The jet is therefore shifted towards the opposite direction. The drop in effectiveness with increasing blowing ratio can be explained by different hole inflow conditions for high and low blowing ratios. In Fig. 8a, hole inflow conditions are shown for a high velocity ratio u_{cc}/u_c which is equivalent to low blowing ratios. In such a case, coolant is mainly fed in through the NACA intake. With increasing blowing ratio, the coolant mass flow provided through the NACA intake is not sufficient. As a consequence, cool-

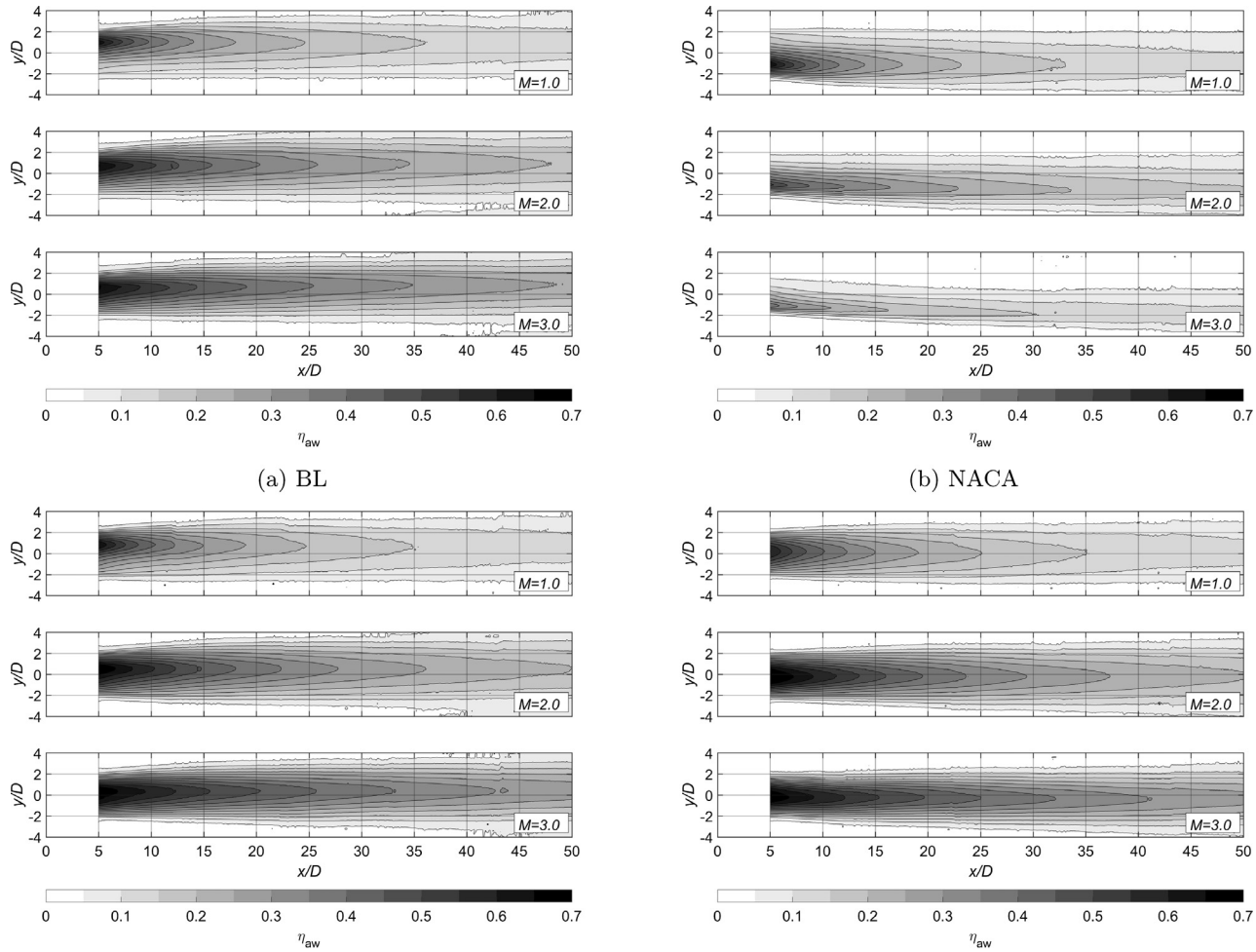

(a) BL (b) NACA

(c) Rounded (d) NACA Rounded

Fig. 7. Contours of adiabatic film cooling effectiveness for $-4 \leqslant y/D \leqslant 4$ and $5 \leqslant x/D \leqslant 50$ at the blowing ratios $M = 1.0; 2.0; 3.0$ and perpendicular coolant flow for the geometries baseline (BL), NACA inlet (NACA), rounded inlet (Rounded) and rounded NACA inlet (NACA-Rounded).

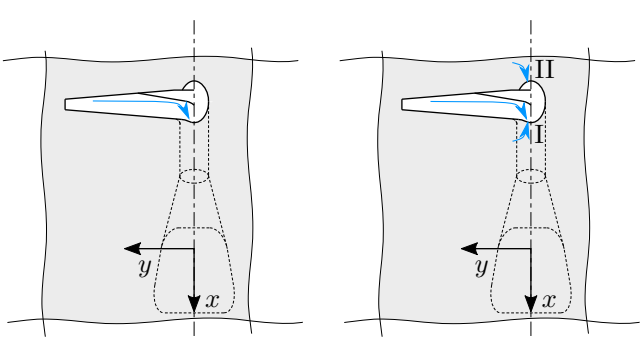

(a) High u_{cc}/u_c (b) Low u_{cc}/u_c

Fig. 8. Hole inflow conditions for NACA inlet geometry at different velocity ratios u_{cc}/u_c.

ant also flows over the sharp-edged parts of the intake (I and II) into the cylindrical hole, see Fig. 8b. At position I, an additional flow separation takes place. Therefore, a larger area is affected by flow separation at the hole inlet and a wide wake area is present at the diffuser inlet. Consequently, flow separates in the diffuser in a wide area as well and the jet constricts for high blowing ratios.

Fig. 7c shows the film cooling effectiveness distribution on the surface for the geometry with a rounded cooling hole inlet. The intent of this geometry is to decrease flow separation at the inlet. As for the baseline case, an asymmetric flow separation occurs and the jet is shifted towards the positive y-direction. At higher blowing ratios, asymmetry is decreased. Compared to the baseline case, the shift of the jet is less distinctive.

Film cooling effectiveness distribution on the surface for the geometry with a rounded NACA inlet is shown in Fig. 7d. This geometry is a combination of the other two geometries discussed. It is expected that the additional rounding of the NACA inlet reduces flow separation. Aim is to resolve the drawback of the NACA inlet with a low effectiveness for high blowing ratios and combine both effects of the new geometries: A reduced flow separation at the cooling hole inlet and a reduced helical motion inside the hole. Results show that an almost symmetric film cooling effectiveness distribution is achieved at all blowing ratios. The asymmetric flow separation in the diffuser is suppressed due to the optimized flow conditions at the cooling hole inlet.

To evaluate the symmetry of the jets quantitatively, the effectiveness distribution in lateral direction is analyzed near the cooling hole exit at $x/D = 5$. It is shown in Fig. 9 at the blowing ratios $M = 1.0$ and $M = 3.0$ for all geometries. At a blowing ratio of $M = 1.0$ (see Fig. 9a), the jet is shifted in positive y-direction for the baseline geometry. The effectiveness is significantly reduced in the area $y/D < 0$. Effectiveness distributions for the geometry with a NACA inlet and the baseline geometry are approximately

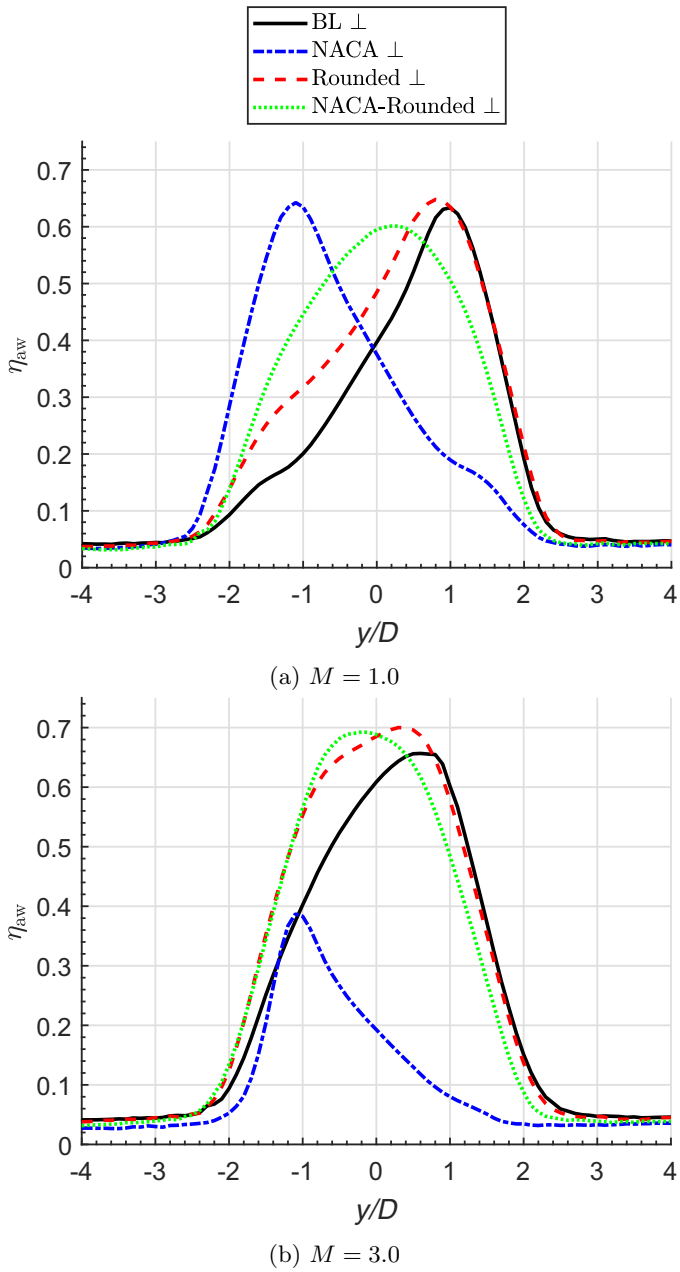

Fig. 9. Distribution of adiabatic film cooling effectiveness η_{aw} in lateral direction at $x/D = 5$ at the blowing ratios $M = 1.0$ and 3.0 and perpendicular coolant flow (⊥) for the geometries baseline (BL), NACA inlet (NACA), rounded inlet (Rounded) and rounded NACA inlet (NACA-Rounded) (Legend applicable for both graphs).

mirrored. In case of a rounded inlet, the maximum is shifted slightly from $y/D \approx 1$ to $y/D \approx 0.8$ compared to the baseline case with a sharp-edged inlet. Lateral extension of the two jets in positive y-direction is equal. However, extension of the jet in negative y-direction is significantly increased in case of the rounded inlet. The reduced flow separation at the inlet leads to a smaller wake area at the diffuser inlet and, thus, to a reduced flow separation in the diffuser. Comparison of the results of the geometries with NACA inlet and rounded inlet indicates that flow separation at the cooling hole inlet has a more severe impact on flow separation in the diffuser than helical motion. However, asymmetric flow separation still occurs even with a reduced flow separation at the inlet. This is not the case for the geometry with a rounded NACA inlet, where it is believed that both flow separation at cooling hole inlet and helical motion are reduced. In this case, the jet is almost symmetric with just a slight shift of the maximum in positive y-direction. Lateral extension is the highest of all cases. Maximum effectiveness ($\eta_{aw,max} \approx 0.6$) is slightly lower than for the rounded inlet geometry ($\eta_{aw,max} \approx 0.66$) and the baseline case ($\eta_{aw,max} \approx 0.64$).

Fig. 9b shows the effectiveness distribution at $x/D = 5$ and the higher blowing ratio $M = 3.0$. In case of the baseline geometry, an almost symmetric pattern with only a slight shift of the maximum effectiveness in positive y-direction is observed. A higher blowing ratio results in a low adiabatic effectiveness and a constricted jet for the NACA inlet geometry. In all other cases, effectiveness distribution is close to symmetric and maximum effectiveness is increased compared to the baseline case. The widest pattern with the highest effectiveness ($\eta_{aw,max} \approx 0.7$) is observed for the geometry with a rounded inlet. At such a high blowing ratio, the velocity ratio u_{cc}/u_c and therefore the helical motion is low. As a consequence, diffuser aerodynamics are not influenced by the helical motion, but by the flow separation at the cooling hole inlet only. Comparing the geometry with a rounded inlet and a rounded NACA inlet it becomes clear that flow separation is the lowest for the rounded inlet. The entire inlet is rounded and, consequently, flow separation is minimized. For the case of the rounded NACA inlet, by contrast, flow still separates at the crossover between NACA intake and cylindrical hole. Consequently, performance is the best for the geometry with a rounded inlet. Lateral extension of the rounded NACA inlet geometry is comparable to that of the baseline case. The maximum effectiveness ($\eta_{aw,max} \approx 0.69$) is higher than for the baseline case $\left(\eta_{aw,max} \approx 0.66\right)$.

The discussed results show that for both the rounded inlet and the rounded NACA inlet, jet asymmetry is decreased at the cooling hole exit. As a consequence, lateral extension of the jet is increased. In the following, the laterally averaged effectiveness is discussed. This allows to analyze quantitatively how film cooling effectiveness develops downstream of the cooling hole exit. Results are laterally averaged for one pitch ($-4 \leqslant y/D < 4$) and shown for the blowing ratios $M = 1.0$ and $M = 3.0$. The results will not be discussed for the NACA inlet, since effectiveness is not increased for this geometry.

Results for the rounded NACA inlet are compared to the baseline case in Fig. 10. For this new geometry, the most symmetric

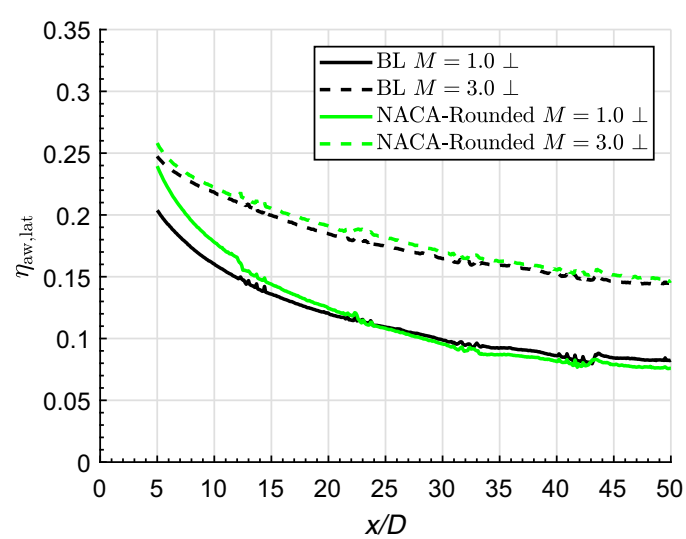

Fig. 10. Laterally averaged adiabatic film cooling effectiveness $\eta_{aw,lat}$ against x/D for the geometries baseline (BL) and rounded NACA inlet (NACA-Rounded) with perpendicular coolant flow (⊥) at the blowing ratios $M = 1.0$ and 3.0.

distribution in lateral direction is present (see Fig. 9). Film cooling effectiveness is the highest at $x/D = 5$ and decreases steadily downstream for both geometries. An increase in blowing ratio results in an increase in cooling effectiveness. This is due to the higher amount of coolant at a higher blowing ratio. Results show that effectiveness is increased for the rounded NACA inlet compared to the baseline case with $\Delta\eta_{\mathrm{aw,lat}} \approx 0.04$ at $x/D = 5$ and a blowing ratio of $M = 1.0$. Farther downstream, lines converge and no differences are present downstream of $x/D \approx 22$. The reason for the increased film cooling effectiveness in the near-hole region is the altered flow separation in the diffuser. At a higher blowing ratio of $M = 3.0$, results are almost identical for both geometries. Effectiveness is increased slightly by about $\Delta\eta_{\mathrm{aw,lat}} \approx 0.01$ for the rounded NACA inlet. At such a high blowing ratio, no severe asymmetric flow separation in the diffuser is present for the baseline case. Consequently, the impact of the changed inlet geometry, which affects the flow separation in the diffuser, is low.

Purpose of the new cooling hole inlet geometries is to reduce the negative impact of perpendicular coolant flow on film cooling performance. In Fig. 11, the laterally averaged effectiveness of the rounded NACA inlet and perpendicular coolant flow is compared to that of the baseline case and parallel coolant flow. This allows to analyze how much of the drop in film cooling effectiveness due to perpendicular coolant flow is eliminated with the rounded NACA inlet geometry.

Results show that there is almost no difference between the rounded NACA inlet geometry with perpendicular coolant flow and the baseline geometry with parallel coolant flow. At a blowing ratio of $M = 1.0$, a slight drop in effectiveness of $\Delta\eta_{\mathrm{aw,lat}} \approx 0.01$ is present at $x/D = 5$ for the rounded NACA inlet geometry. Farther downstream, lines converge and no difference is observed for $x/D > 21$. Upstream of $x/D \approx 13$, effectiveness is slightly higher ($\Delta\eta_{\mathrm{aw,lat}} \approx 0.01$) for the rounded NACA inlet geometry and a blowing ratio of $M = 3.0$. Farther downstream, the effectiveness is with up to $\Delta\eta_{\mathrm{aw,lat}} \approx 0.01$ slightly lower. Consequently, the effectiveness drop due to perpendicular coolant flow can be eliminated almost entirely by a rounded NACA inlet geometry. These results prove that there is huge potential in optimizing cooling hole inlet geometry.

In Fig. 12 results for the geometry with a rounded inlet are compared to the results for the rounded NACA inlet geometry. For both geometries, laterally averaged effectiveness decreases steadily downstream of $x/D = 5$. No difference is found between the two geometries at a blowing ratio of $M = 1.0$. This seems unexpected, as the jet footprint for the rounded NACA inlet geometry is more symmetric, see Fig. 9a. However, maximum effectiveness is higher for the rounded inlet geometry. Both effects compensate each other and no difference is present when effectiveness is laterally averaged. At the highest tested blowing ratio of $M = 3.0$, however, laterally averaged effectiveness for the rounded inlet geometry is even higher than for the rounded NACA inlet geometry. The increase in effectiveness is almost constant ($\Delta\eta_{\mathrm{aw,lat}} \approx 0.02$) in the entire measurement area. This higher effectiveness is due to the increased lateral jet extension compared to the rounded NACA inlet at this blowing ratio.

Consequently, effectiveness of the rounded inlet is comparable to that of the baseline case and parallel coolant flow at $M = 1.0$ and even higher than that of the baseline case and parallel coolant flow at $M = 3.0$, see Fig. 11. This is unexpected. Results of the baseline geometry measurements show that at a high blowing ratio, the jet constricts for the baseline case and parallel coolant flow [17]. The reason is believed to be a flow separation at the sidewalls of the diffuser. Such a jet constriction also occurs for the rounded NACA inlet geometry. The changed inflow conditions for the rounded inlet seem to improve the diffuser aerodynamics, such that the flow separation at the sidewalls of the diffuser is improved. As a consequence, effectiveness at high blowing ratios is higher than for parallel coolant flow, where such a flow separation occurs.

To summarize the effects on film cooling effectiveness, spatially averaged values are plotted against all tested blowing ratios in Fig. 13. Results are spatially averaged within the entire measurement area ($-4 \leqslant y/D < 4$ and $5 \leqslant x/D \leqslant 50$). Values for the three geometries with an altered inlet geometry are compared to the baseline case with perpendicular coolant flow. For the baseline geometry, spatially averaged effectiveness increases with the blowing ratio until a plateau is reached at $M = 2.5$. For the NACA inlet geometry, spatially averaged effectiveness increases with increasing blowing ratio until a maximum value of $\overline{\overline{\eta}}_{\mathrm{aw}} \approx 0.11$ is

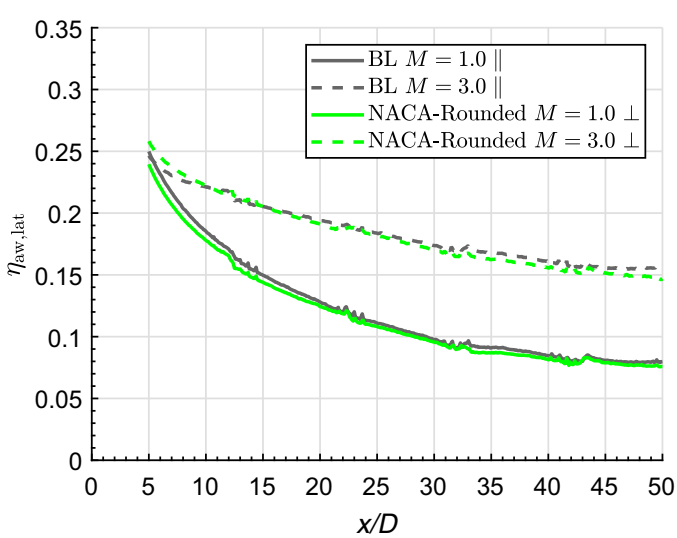

Fig. 11. Laterally averaged adiabatic film cooling effectiveness $\eta_{\mathrm{aw,lat}}$ against x/D for the geometries baseline (BL) with parallel coolant flow (||) and rounded NACA inlet (NACA-Rounded) with perpendicular coolant flow (⊥) at the blowing ratios $M = 1.0$ and 3.0.

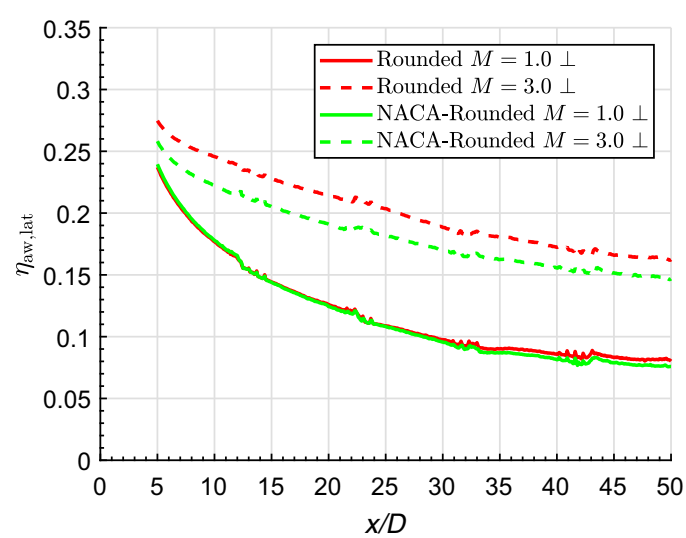

Fig. 12. Laterally between averaged adiabatic film cooling effectiveness $\eta_{\mathrm{aw,lat}}$ against x/D for the geometries rounded inlet (Rounded) and rounded NACA inlet (NACA-Rounded) with perpendicular coolant flow at the blowing ratios $M = 1.0$ and 3.0.

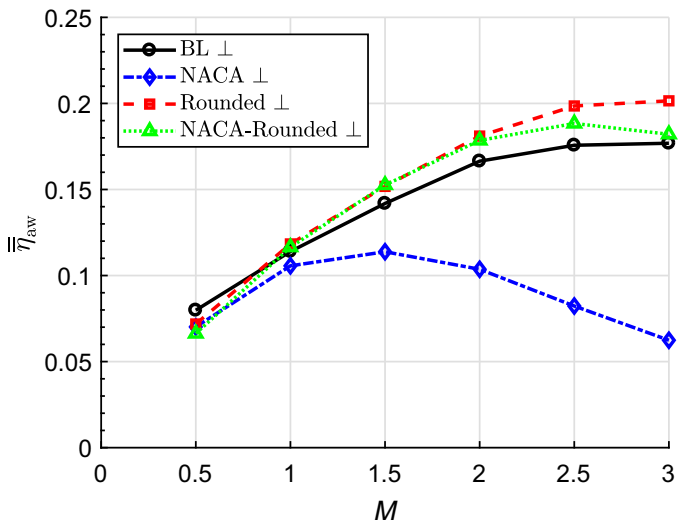

Fig. 13. Spatially averaged adiabatic film cooling effectiveness $\overline{\overline{\eta}}_{aw}$ against the blowing ratio M for the geometries baseline (BL), NACA inlet (NACA), rounded inlet (Rounded) and rounded NACA inlet (NACA-Rounded).

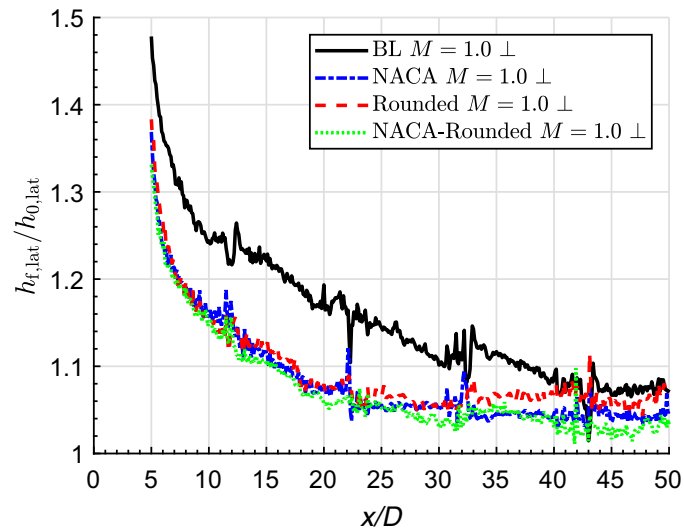

Fig. 14. Laterally averaged heat transfer variation due to film cooling ($h_{f,lat}/h_{0,lat}$) against x/D for the geometries baseline, NACA inlet (NACA), rounded inlet (Rounded) and rounded NACA inlet (NACA-Rounded) at a blowing ratio of $M = 1.0$.

reached at a blowing ratio of $M = 1.5$. When the blowing ratio increases further, the jet constricts and the effectiveness drops severely. At all blowing ratios, effectiveness is lower than for the baseline case. For the rounded inlet and the rounded NACA inlet geometry, qualitative distribution is comparable to the baseline case for $M \leqslant 2.0$. No severe differences are observed between the two new geometries. At $M = 0.5$, spatially averaged effectiveness is slightly lower than for the baseline case. At all blowing ratios $M \geqslant 1.0$, however, effectiveness is increased for the geometries with a rounded inlet and a rounded NACA inlet compared to that of the baseline case. At blowing ratios $M \geqslant 2.5$, effectiveness is highest for the rounded inlet geometry. The maximum effectiveness ($\overline{\overline{\eta}}_{aw} \approx 0.20$) is reached at the highest blowing ratio $M = 3.0$. In case of the rounded NACA inlet geometry, a maximum is reached at $M = 2.5$ ($\overline{\overline{\eta}}_{aw} \approx 0.19$). The highest increase in effectiveness for the rounded NACA inlet geometry compared to the baseline geometry is present at $M = 2.0$ and $M = 2.5$, with about 9%. For the geometry with a rounded inlet, highest differences to the baseline case occur at the highest blowing ratio of $M = 3.0$, where the value is increased by about 12%. The discussed results prove that asymmetric flow separation in the diffuser can be reduced by changing the cooling hole inlet geometry. As a consequence, effectiveness is increased.

To evaluate film cooling performance, the impact of film cooling on heat transfer coefficient has to be investigated as well. Laterally averaged heat transfer variation is shown in Fig. 14 at a blowing ratio of $M = 1.0$ for all geometries. In all cases, heat transfer coefficient is augmented due to film cooling. The augmentation is highest at $x/D = 5$ and decreases downstream. Small perturbations are visible in the areas, where the overlapping infrared images are merged.

Compared to the baseline case, heat transfer coefficients are significantly lower for all new geometries. There is no severe difference between all new geometries. At $x/D = 5$, heat transfer coefficients are augmented by about 34–38% for the new geometries due to film cooling. Farther downstream at the end of the measurement area, an augmentation of heat transfer coefficients by 4–8% is still present. At $x/D = 25$, heat transfer augmentation is about 8 percentage points higher for the baseline case than for all other geometries. Farther downstream, the lines converge. The high heat transfer coefficient of the baseline case is believed to be due to an increased turbulence in the film cooling jet (see Fraas et al. [17]). The high turbulence is caused by the severe deflection and flow separation at the cooling hole inlet for perpendicular coolant flow. For all new geometries, coolant inflow conditions are altered. This results in better inflow conditions and a lower turbulence production. Consequently, heat transfer coefficients are lower for the new geometries. It has to be considered, though, that the reduction of the heat transfer coefficient is in the range of the given measurement uncertainty. Results at other blowing ratios are alike and, hence, not discussed here.

The discussed results show that the cooling hole inlet has a strong influence on both heat transfer coefficients and film cooling effectiveness. To analyze the combined effects, net heat flux reduction is determined. Spatially averaged net heat flux reduction ($\overline{\overline{NHFR}}$) is plotted against all investigated blowing ratios in Fig. 15. To calculate net heat flux reduction, the non-dimensional temperature Θ is set to a typical value of 1.6. The qualitative results are transferable for $1.2 \leqslant \Theta \leqslant 2$. For the baseline case, net

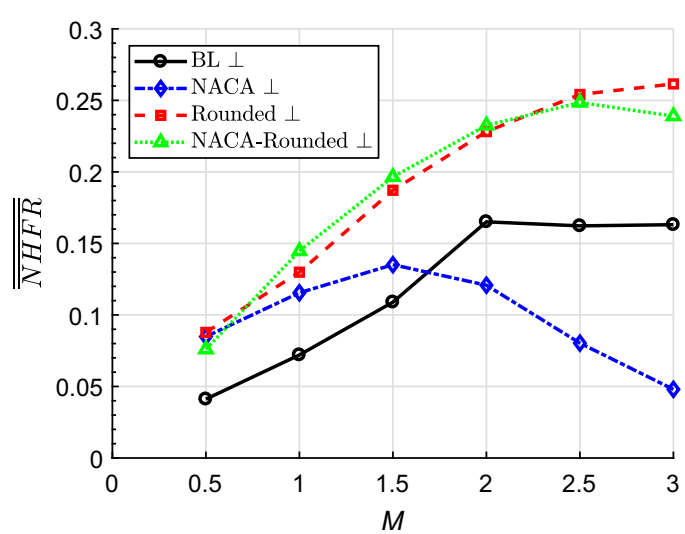

Fig. 15. Spatially averaged net heat flux reduction $\overline{\overline{NHFR}}$ for $\Theta = 1.6$ against the blowing ratio M for the geometries baseline (BL), NACA inlet (NACA), rounded inlet (Rounded) and rounded NACA inlet (NACA-Rounded).

heat flux reduction increases with blowing ratio until a plateau is reached at $M = 2.0$. For all geometries with an altered inlet, the net heat flux reduction increases with increasing blowing ratio until a maximum value is reached. A maximum is reached at a blowing ratio of $M = 1.5$ and $M = 2.5$ for the NACA inlet and the rounded NACA inlet, respectively. Subsequently, the net heat flux reduction drops. For the rounded inlet, by contrast, the maximum is reached at the highest blowing ratio of $M = 3.0$. Differences between the rounded NACA inlet and the rounded inlet are low for $M \leqslant 2.5$. These trends are similar to those discussed for the adiabatic film cooling effectiveness in Fig. 13. However, differences between the new geometries and the baseline case differ qualitatively. For all geometries with an altered inlet, net heat flux reduction is increased for $M \leqslant 1.5$ compared to the baseline case. This shows the importance of considering both heat transfer variation and cooling effectiveness. Both the rounded inlet geometry and the rounded NACA inlet geometry cause a higher net heat flux reduction for all blowing ratios compared to the baseline geometry. Increase in net heat flux reduction is lowest for a blowing ratio of $M = 0.5$. At this blowing ratio, no combined effect of reduced heat transfer coefficient and increased effectiveness is present as it is the case for $M \geqslant 1$. Differences between the new geometries and the baseline are up to $\Delta\overline{\overline{NHFR}} \approx 0.1$ in case of the rounded inlet at $M = 3.0$ and $\Delta\overline{\overline{NHFR}} \approx 0.09$ in case of the rounded NACA inlet at $M = 1.5$ and $M = 2.5$. The highest relative increase of more than 80% is achieved with the rounded NACA inlet geometry at a blowing ratio of $M = 1.5$. To conclude, results for the net heat flux reduction show that film cooling performance is increased significantly for the rounded inlet and the rounded NACA inlet geometry.

4. Conclusions

The objective of this study was to analyze the potential of shaping the hole inlet of a laidback fan-shaped film cooling hole with perpendicular coolant flow in order to increase the cooling performance. Such shaping of the cooling hole inlet is expected to be possible in the near future due to additive manufacturing. For this purpose, three cooling holes with new inlet geometries were investigated and compared to a baseline case with a sharp-edged cylindrical inlet. The diffuser remained unchanged for all geometries.

Results show that the cooling hole inlet geometry has a major impact on the jet distribution on the surface. The asymmetric flow separation in the diffuser which is usually present for a perpendicular coolant flow is affected by the new inlet geometries. Results indicate that flow separation at the cooling hole inlet has a more severe impact on the asymmetric flow separation in the diffuser than the helical motion in the cylindrical part of the cooling hole. However, to establish an entirely symmetric jet distribution, both helical motion and flow separation at the cooling hole inlet need to be suppressed. To confirm these conclusions, high-quality CFD calculations or flow measurements are needed in the future.

The reduced asymmetric flow separation in the diffuser leads to an increased film cooling effectiveness. The highest increase is observed in the near-hole region. The resulting effectiveness is even comparable to a case with parallel coolant flow. Consequently, with the new cooling hole shapes, perpendicular coolant flow does not result in a drop of film cooling effectiveness. Spatially averaged effectiveness was increased by up to 12% compared to the baseline case.

Heat transfer augmentation is affected by the new cooling hole inlets. Due to the optimized inlet geometries, heat transfer coefficients are significantly lower than for the baseline case.

It was shown that due to the combined effects of both lower heat transfer coefficients and an increased cooling effectiveness, heat flux is reduced significantly for the best performing inlet geometries when compared to the baseline case. The highest relative improvement of more than 80% is achieved at a blowing ratio of $M = 1.5$.

For the first time, the results show that film cooling performance can be increased significantly by a changed cooling hole inlet geometry in case of perpendicular coolant flow. With new manufacturing technologies, such geometries can be manufactured in the near future. Consequently, turbine blades will be cooled more efficiently and gas turbine effectiveness will be increased.

Declaration of interest

A patent has been filed by the authors for one of the geometries (rounded NACA inlet). There are no other conflicts of interest.

Acknowledgment

The investigations were conducted as part of the joint research program COOREFLEX-turbo in the frame of AG Turbo. The work was supported by the Bundesministerium für Wirtschaft und Energie (BMWi) as per resolution of the German Federal Parliament under Grant No. 03ET7021F. The authors gratefully acknowledge AG Turbo and Siemens AG for the support and permission to publish this paper.

Thanks to Emre Ayan, Timo Birnkraut, Onur Ceylan, Erik Dollinger, Svenja Feigl, Benedikt Fischer, Arno Göpfert, Christiane Haußecker, Tobias Storz, and Christian Zehnle for their contributions to this paper.

The responsibility for the content lies solely with its authors.

References

[1] B. Johnson, W. Tian, K. Zhang, H. Hu, An experimental study of density ratio effects on the film cooling injection from discrete holes by using PIV and PSP techniques, Int. J. Heat Mass Transfer 76 (2014) 337–349, https://doi.org/10.1016/j.ijheatmasstransfer.2014.04.028.

[2] J.B. Anderson, E.K. Wilkes, J.W. McClintic, D.G. Bogard, Effects of freestream Mach number, Reynolds number, and boundary layer thickness on film cooling effectiveness of shaped holes, in: Proceedings of ASME Turbo Expo 2016, no. GT2016-56152, 2016. https://doi.org/10.1115/GT2016-56152.

[3] C. Saumweber, A. Schulz, S. Wittig, Free-stream turbulence effects on film cooling with shaped holes, J. Turbomach. 125 (1) (2003) 65–73, https://doi.org/10.1115/1.1515336.

[4] D.G. Bogard, K.A. Thole, Gas turbine film cooling, J. Propul. Power 22 (2) (2006) 249–270, https://doi.org/10.2514/1.18034.

[5] R.J. Goldstein, E. Eckert, F. Burggraf, Effects of hole geometry and density on three-dimensional film cooling, Int. J. Heat Mass Transfer 17 (5) (1974) 595–607, https://doi.org/10.1016/0017-9310(74)90007-6.

[6] Y. Yu, C.-H. Yen, T.I.-P. Shih, M.K. Chyu, S. Gogineni, Film cooling effectiveness and heat transfer coefficient distributions around diffusion shaped holes, J. Heat Transfer 124 (5) (2002) 820–827, https://doi.org/10.1115/1.1418367.

[7] M. Gritsch, A. Schulz, S. Wittig, Adiabatic wall effectiveness measurements of film-cooling holes with expanded exits, J. Turbomach. 120 (3) (1998) 549–556, https://doi.org/10.1115/1.2841752.

[8] C.M. Bell, H. Hamakawa, P.M. Ligrani, Film cooling from shaped holes, J. Heat Transfer 122 (2) (2000) 224, https://doi.org/10.1115/1.521484.

[9] T. Furukawa, P.M. Ligrani, Transonic film cooling effectiveness from shaped holes on a simulated turbine airfoil, J. Thermophys. Heat Transfer 16 (2) (2002) 228–237, https://doi.org/10.2514/2.6672.

[10] R.S. Bunker, A review of shaped hole turbine film-cooling technology, J. Heat Transfer 127 (4) (2005) 441–453, https://doi.org/10.1115/1.1860562.

[11] A. Kohli, K.A. Thole, Entrance effects on diffused film-cooling holes, in: Proceedings of ASME Turbo Expo 1998, no. 98-GT-402, 1998. https://doi.org/10.1115/98-GT-402.

[12] M. Gritsch, C. Saumweber, A. Schulz, S. Wittig, E. Sharp, Effect of internal coolant crossflow orientation on the discharge coefficient of shaped film-cooling holes, J. Turbomach. 122 (1) (2000) 146–152, https://doi.org/10.1115/1.555436.

[13] C. Saumweber, A. Schulz, S. Wittig, M. Gritsch, Effects of entrance crossflow directions to film cooling holes, Ann. New York Acad. Sci. 934 (1) (2001) 401–408, https://doi.org/10.1111/j.1749-6632.2001.tb05876.x.

[14] M. Gritsch, A. Schulz, S. Wittig, Effect of internal coolant crossflow on the effectiveness of shaped film-cooling holes, J. Turbomach. 125 (3) (2003) 547–554, https://doi.org/10.1115/1.1580523.

[15] C. Saumweber, A. Schulz, Comparison the cooling performance of cylindrical and fan-shaped cooling holes with special emphasis on the effect of internal

coolant cross-flow, in: Proceedings of ASME Turbo Expo 2008, no. GT2008-51036, 2008. https://doi.org/10.1115/GT2008-51036.
[16] J.W. McClintic, J.B. Anderson, D.G. Bogard, T.E. Dyson, Z.D. Webster, Effect of internal crossflow velocity on film cooling effectiveness—Part I: axial shaped holes, J. Turbomach. 140 (1) (2018) 011003, https://doi.org/10.1115/1.4037997.
[17] M. Fraas, T. Glasenapp, A. Schulz, H.-J. Bauer, Film cooling measurements for a laidback fan-shaped hole - effect of coolant crossflow on cooling effectiveness and heat transfer, in: Proceedings of ASME Turbo Expo 2018, no. GT2018-75389, 2018. https://doi.org/10.1115/GT2018-75389.
[18] R.S. Bunker, J.C. Bailey, Film cooling discharge coefficient measurements in a turbulated passage with internal crossflow, J. Turbomach. 123 (4) (2001) 774–780, https://doi.org/10.1115/1.1397307.
[19] C. Heneka, A. Schulz, H.-J. Bauer, Influence of internal parallel and V-shaped ribs on the discharge coefficient of a cylindrical film cooling hole, Proc. Inst. Mech. Eng., Part A: J. Power Energy 225 (7) (2011) 985–994, https://doi.org/10.1177/0957650911410926.
[20] Y. Agata, T. Takahashi, E. Sakai, K. Nishino, Effect of orientation of internal turbulence promoting ribs on flow characteristics for film cooling, J. Therm. Sci. Technol. 8 (1) (2013) 15–27, https://doi.org/10.1299/jtst.8.15.
[21] C.-L. Liu, L. Ye, H.-R. Zhu, J.-X. Luo, Investigation on the effects of rib orientation angle on the film cooling with ribbed cross-flow coolant channel, Int. J. Heat Mass Transfer 115 (2017) 379–394, https://doi.org/10.1016/j.ijheatmasstransfer.2017.08.063.
[22] E. Sakai, T. Takahashi, Experimental and numerical study on effects of turbulence promoters on flat plate film cooling, in: Proceedings of ASME Turbo Expo 2011, no. GT2011-45196, 2011. https://doi.org/10.1115/GT2011-45196.
[23] E. Sakai, T. Takahashi, Y. Agata, Experimental study on effects of internal ribs and rear bumps on film cooling effectiveness, J. Turbomach. 135 (3) (2013) 031025, https://doi.org/10.1115/1.4007546.
[24] G. Wilfert, S. Wolff, Influence of internal flow on film cooling effectiveness, J. Turbomach. 122 (2) (2000) 327–333, https://doi.org/10.1115/1.555449.
[25] A. Basak, R. Acharya, S. Das, Additive manufacturing of single-crystal superalloy CMSX-4 through scanning laser epitaxy: computational modeling, experimental process development, and process parameter optimization, Metall. Mater. Trans. A 47 (2016) 3845–3859, https://doi.org/10.1007/s11661-016-3571-y.
[26] C.K. Stimpson, J.C. Snyder, K.A. Thole, D. Mongillo, Effectiveness measurements of additively manufactured film cooling holes, J. Turbomach. 140 (1) (2018) 011009, https://doi.org/10.1115/1.4038182.
[27] M. Fraas, T. Glasenapp, A. Schulz, H.-J. Bauer, Introducing a new test rig for film cooling measurements with realistic hole inflow conditions, in: Proceedings of ASME Turbo Expo 2017, no. GT2017-63585, 2017. https://doi.org/10.1115/GT2017-63585.
[28] C.W. Frick, F.D. Wallace, L.M. Randall, E.A. Mossman, An Experimental Investigation of NACA Submerged-Duct Entrances, Patent Number: NACA-MR-A5E23, 1945.
[29] H. Choe, W.M. Kays, R.J. Moffat, The superposition approach to film-cooling, in: Proceedings of ASME Winter Annual Meeting 1974, 1974.
[30] D.E. Metzger, H.J. Carper, L.R. Swank, Heat transfer with film cooling near nontangential injection slots, J. Eng. Gas Turb. Power 90 (2) (1968) 157, https://doi.org/10.1115/1.3609155.
[31] M. Gritsch, S. Baldauf, M. Martiny, A. Schulz, S. Wittig, The superposition approach to local heat transfer coefficients in high density ratio film cooling flows, in: Proceedings of ASME Turbo Expo 1999, no. 99-GT-168, 1999. https://doi.org/10.1115/99-GT-168.
[32] M. Ochs, A. Schulz, H.-J. Bauer, High dynamic range infrared thermography by pixelwise radiometric self calibration, Infrared Phys. Technol. 53 (2) (2010) 112–119, https://doi.org/10.1016/j.infrared.2009.10.002.
[33] M. Ochs, T. Horbach, A. Schulz, R. Koch, H.-J. Bauer, A novel calibration method for an infrared thermography system applied to heat transfer experiments, Meas. Sci. Technol. 20 (7) (2009) 075103, https://doi.org/10.1088/0957-0233/20/7/075103.
[34] D.W. Luckey, D.K. Winstanley, G.J. Hanus, M.R. L'Ecuyer, Stagnation region gas film cooling for turbine blade leading-edge applications, J. Aircraft 14 (5) (1977) 494–501, https://doi.org/10.2514/3.58806.
[35] S.J. Kline, F.A. McClintock, Describing uncertainties in single-sample experiments, Mech. Eng. 75 (1) (1953) 3–8.